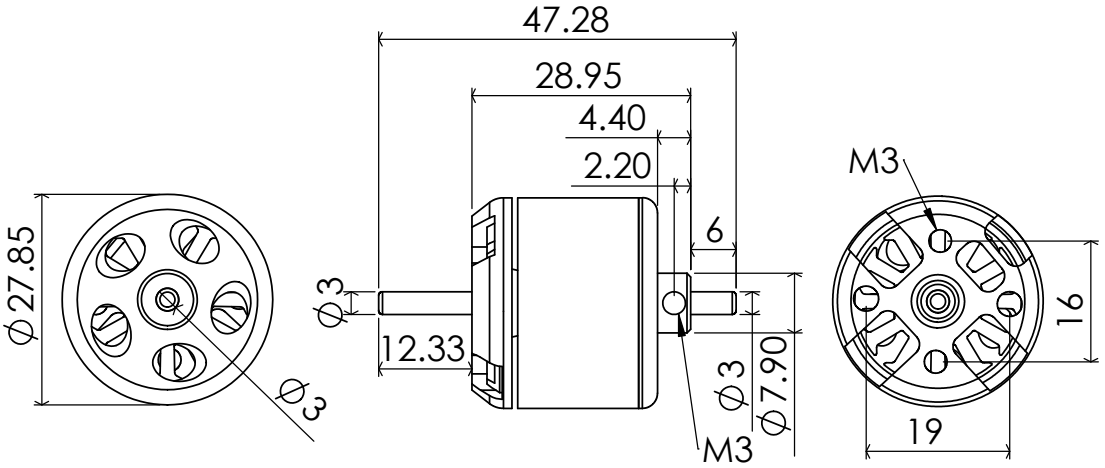S2212